Copy for file No. 701

DISTRIBUTION: E F G X Y (FOR OFFICIAL USE ONLY)

ENGINEERING NOTES

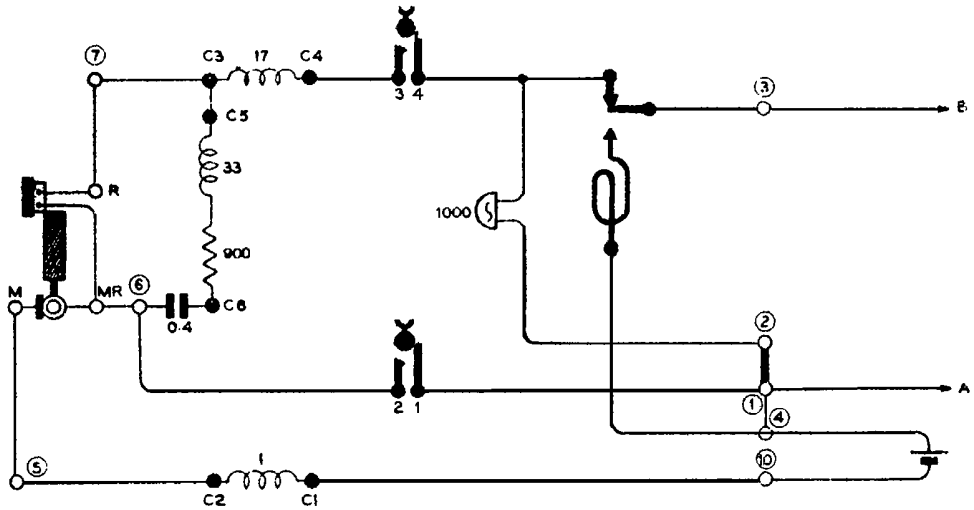

NOTES

1. WHEN EXTENSION BELL REQUIRED WIRE BETWEEN BLOCK TERMINALS 2 & 3. EXTENSION BELL INSTRUCTIONS IN CIRCUIT INSIDE TELEPHONE SHOULD BE DISREGARDED.
2. FOR METHOD OF CABLING SEE B1131

(8) ○
(9) ○

○ TELEPHONE TERMINALS
C INDUCTION COIL TERMINALS

N.Z. POST OFFICE

2·5·61

MAGNETO TELEPHONE (WALL)
ERICSSON Nº N2204A17

SCHEMATIC

S.L. Nº F340

PAGE 1 OF 2

ISSUE 2

TELEPHONES STATIONS B1133

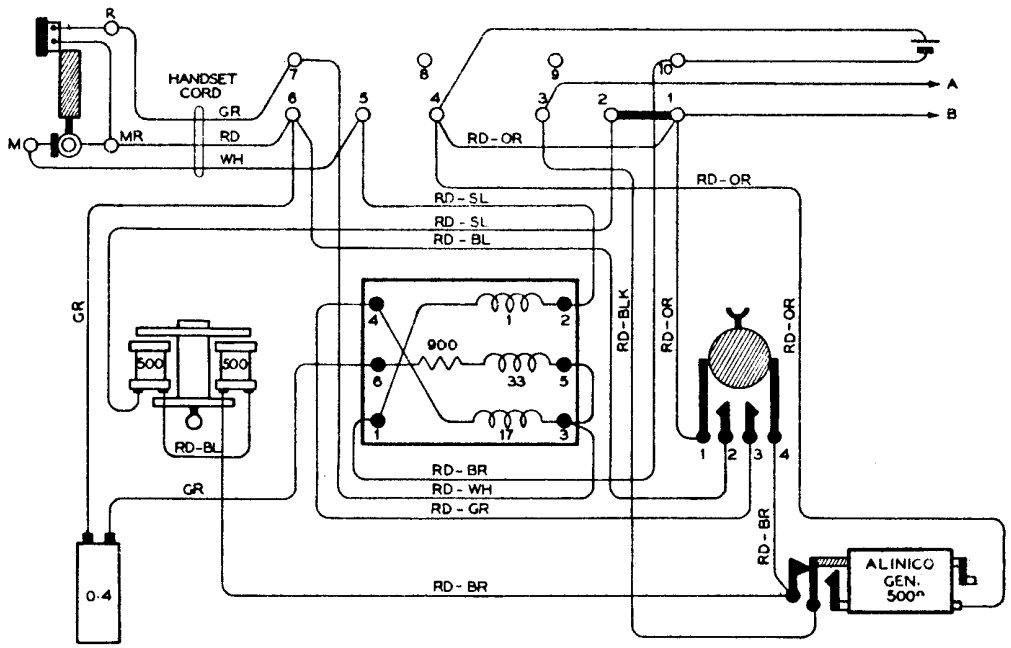

TELEPHONES STATIONS B1133

PAGE 2 OF 2

ISSUE 2

WIRING

MAGNETO TELEPHONE (WALL)
ERICSSON Nº N2204A17

S.L.Nº F340