ORIGINAL FRAME SIZE. 255mm × 390mm

THIRD ANGLE PROJECTION

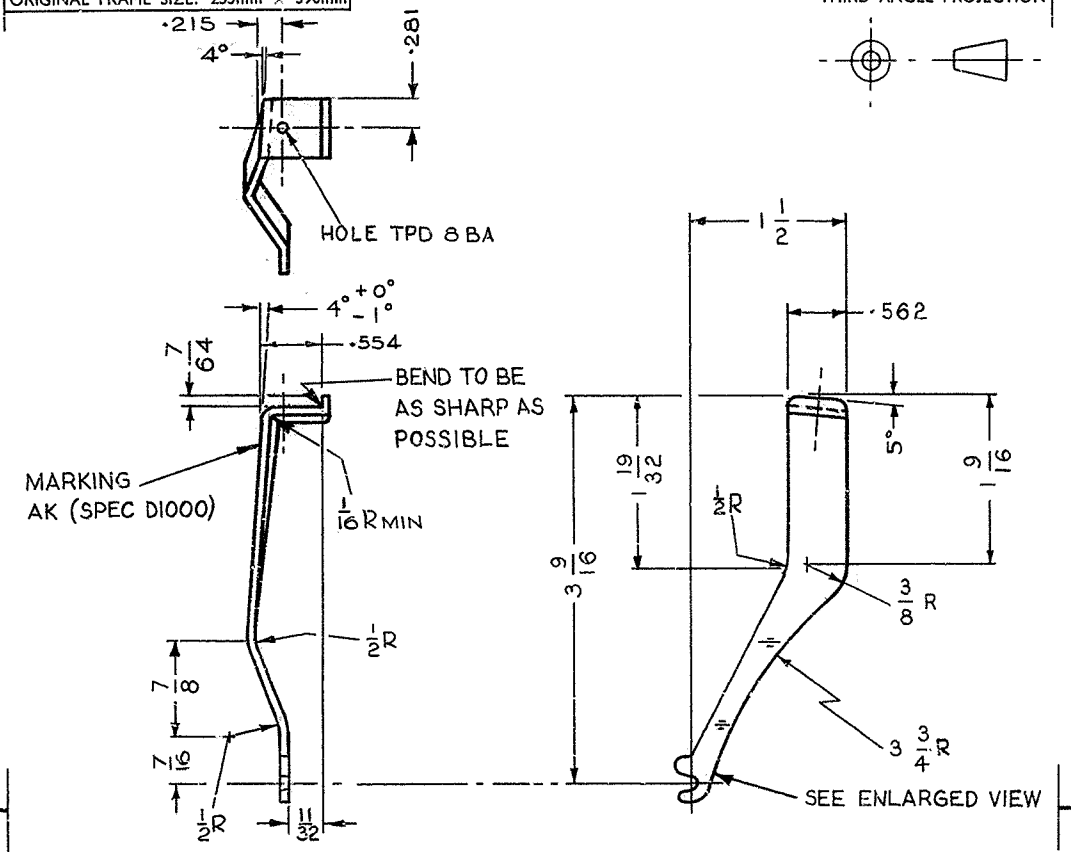

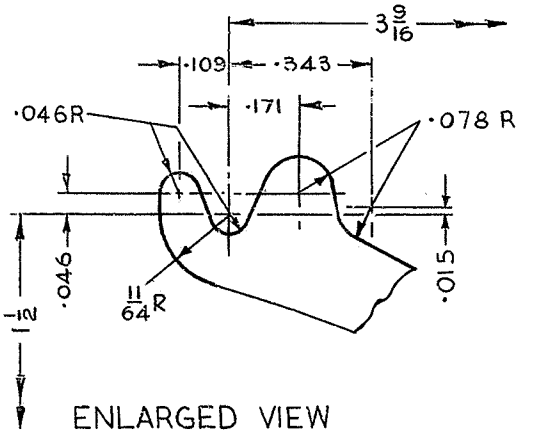

ENLARGED VIEW

NOTE :-
Sc 8BA x 1/4" Ch Hd, Br, CLEAN & WASHER 8BA LARGE, Br, Ni P TO BE SECURELY ATTACHED TO EACH UNIT

FIRST USE:- TELEPHONE 746 (DRG 92773)

DIMENSIONS IN INCHES
DO NOT SCALE

REFERENCES
SPECS. D1000, BS 265 & M 37
DRG. 92773

AMENDMENT	ISSUE

A3 / A4	DRN JR CKD	MATERIAL BRASS HARD SPEC BS265 ·080"	FINISH Ni P Pol SPEC M37
	CERTIFICATION DATE 11.10.71	HOOK, RECEIVER AK	

E IN C 4653	POST OFFICE TELECOMMUNICATIONS HEADQUARTERS TD 2·3·1 SECTION	93256