ASTER
HESE LINES 26"x29"

/D.O.

E-IN-C 34
GEN. GEN. D003.2

D510

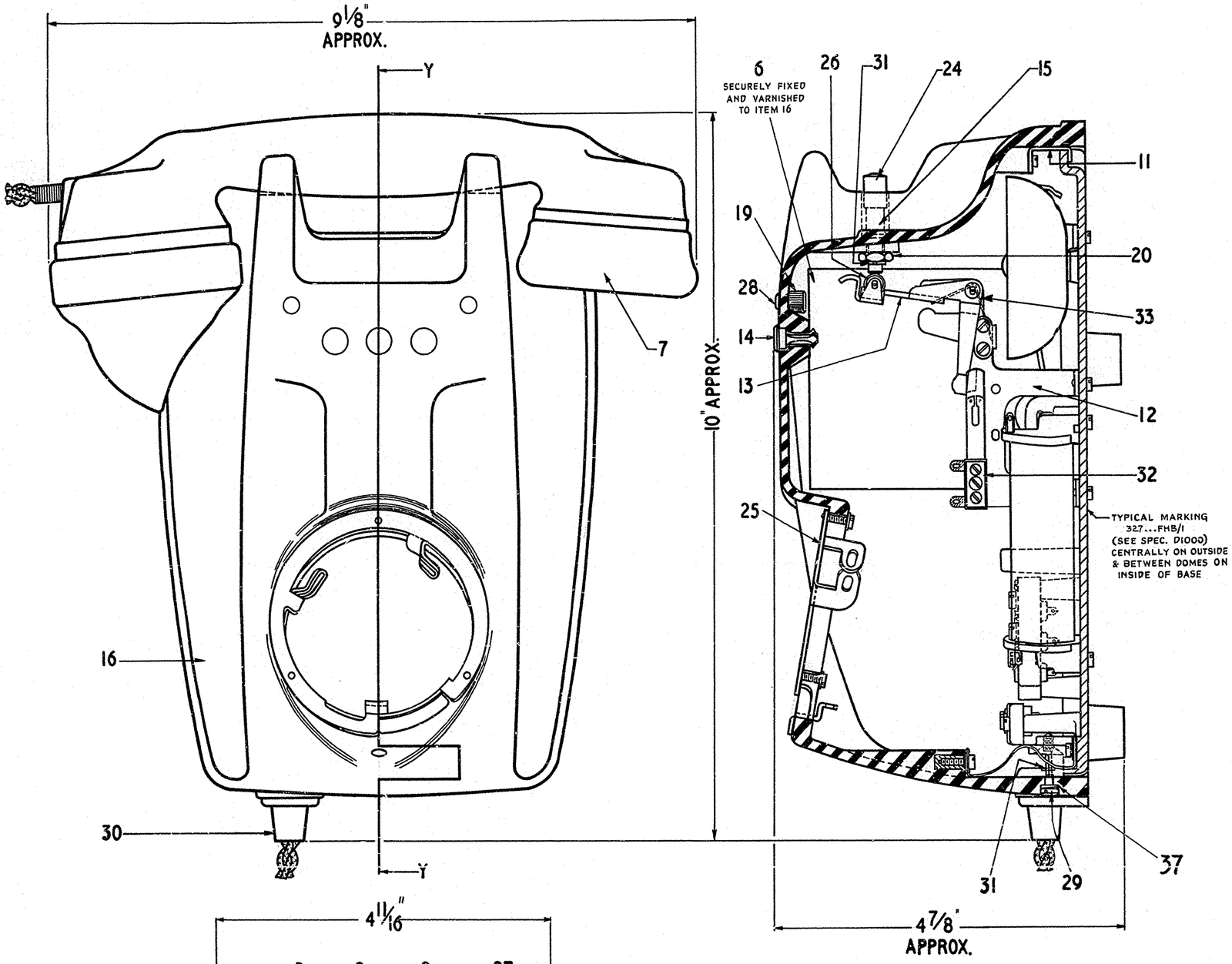

SECTION Y-Y THROUGH ITEM 16
(ITEM 7 OMITTED)

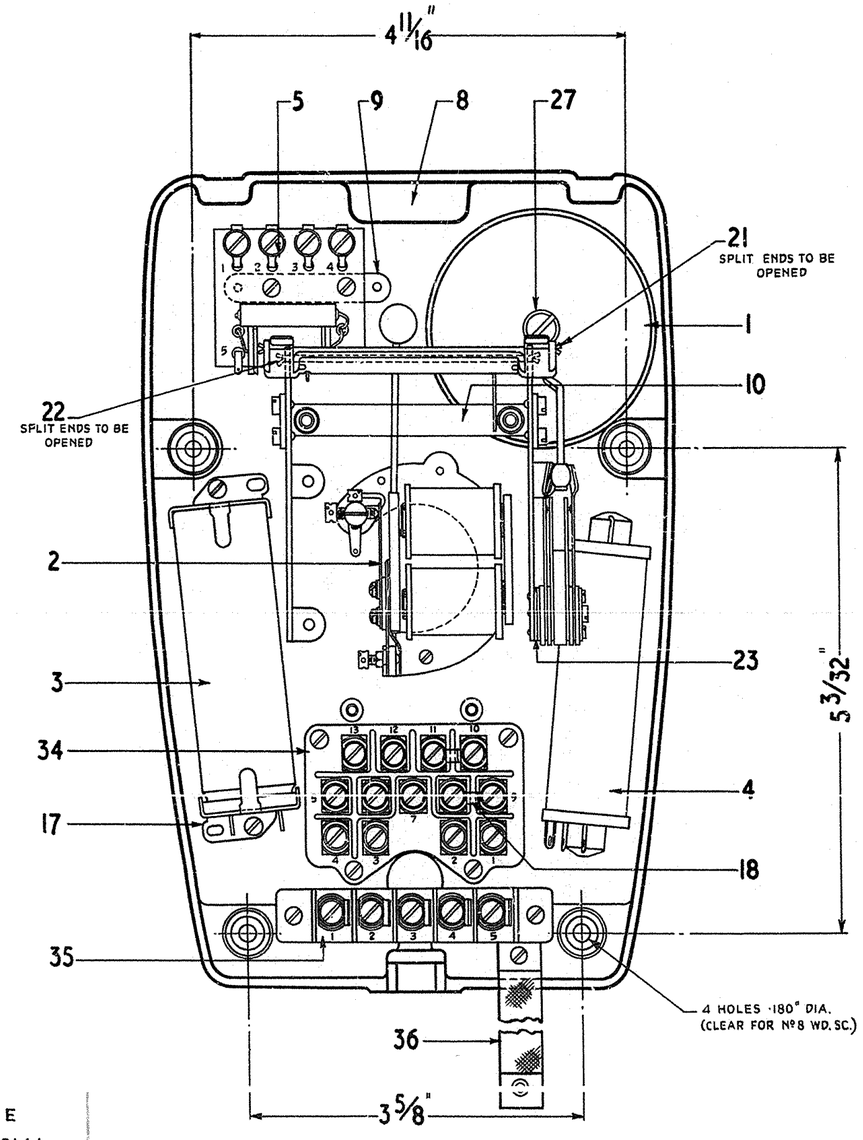

VIEW WITH ITEM 16 REMOVED

COLOURS :- BLACK, RED, IVORY, GREEN.

E
N1081A1

SCHEDULE

ITEM	DESCRIPTION	DRG.	SPEC	Nº OFF
1	Ø BELL GONG Nº 2	CD 254	S16	1
2	Ø BELL Nº65A (UNMOUNTED)	62910	S187	1
3	Ø CAPACITOR MC. Nº 97	—	D1251	1
4	Ø COIL INDUCTION Nº27 (LESS C'SK SCS)	62207	D1491	1
5	Ø FILTER SUPPRESSION Nº26A	90137	D1853	1
6	LABEL, DIAGRAM N427	DG M. 427	—	1
7	TELEPHONE Nº 164 (COLOUR)	9509	S67	1
8	Ø 1/DBA/21 (BASEPLATE, TELEPHONE)	DBA/21	—	1
9	Ø 1/DBR/235 (BRACKET, MTG. FILTER)	DBR/235	—	1
10	Ø 1/DBR/237 (BRACKET, MTG. KEY)	DBR/237	—	1
11	1/DBR/306 (BRACKET, CASE)	DBR/306	—	2
12	Ø 1/DBR/307 (BRACKET, SWITCH, MECH.)	DBR/307	—	2
13	Ø 1/DBR/308 (BRACKET, SWITCH)	DBR/308	—	1
14	Ø 1/DBU/11 COLOUR (BUTTON DUMMY)	DBU/11	—	3
15	1/SBU/65 (BUSH, METAL)	SBU/65	—	2
16	Ø 1/DCA/89 COLOUR (CASE TELEPHONE)	DCA/89	—	1
17	1/DCL/107 (CLIP, CAPACITOR)	DCL/107	—	2
18	1/SLI/2 (LINK, BRASS)	SLI/2	—	2
19	1/DNU/35 (NUT, CIRCULAR)	DNU/35	—	2
20	1/SNU/65 (NUT, HEX.)	SNU/65	—	2
21	Ø 2/SPI/40 (PIVOT)	SPI/40	—	1
22	Ø 3/SPI/40 (PIVOT)	SPI/40	—	1
23	2/SPL/77 (PLATE METAL)	SPL/77	—	1
24	Ø 1/DPL/362 (PLUNGER SWITCH)	DPL/362	—	2
25	Ø 1/DRI/24 (RING, DIAL, MOUNTING)	DRI/24	—	1
26	Ø 2/SRO/6 (ROLLER)	SRO/6	—	2
27	2/SSC/17 (S.C. SPECIAL 2BA)	SSC/17	—	1
28	1/DSC/151 (SC. SPECIAL, 6BA)	DSC/151	—	2
29	Ø 1/DSC/380 (SCREW, LOCKING 4BA)	DSC/380	—	1
30	Ø 1/DSL/15 (SLEEVE, CORD)	DSL/15	—	1
31	Ø 1/SSP/495 (SPRING, CLAMPING)	SSP/495	—	3
32	Ø 1/SSP/709 (SPRING-SET ASSEMBLY)	SSP/709	—	1
33	Ø 1/DSP/1146 (SPRING, SWITCH MECHANISM)	DSP/1146	—	1
34	Ø 1/SST/56 (STRIP CONNEXION)	SST/56	—	1
35	Ø 1/SST/57 (STRIP CONNEXION)	SST/57	—	1
36	Ø 1/DST/163 (STRAP RESTRAINING)	DST/163	—	1
37	Ø 1/DSP/550 (SPRING, SPIRAL)	DSP/550	—	1

ITEM	SCREWS, ETC.	MTL	FINISH	Nº OFF
1	WASHER LOCKING Nº1/2BA	—	—	1
2	SC. 5BA x 3/16" CH. HD.	BR	Ni.P.Mt.	2
	SC. 7BA x 3/16" CH. HD.	BR	Ni.P.Mt.	1
4	SC. 6BA x 1/4" CH. HD.	BR	Ni.P.Mt.	2
5	SC. 6BA x 7/32" CH. HD.	BR	Ni.P.Mt.	2
9	SC. 6BA x 3/16" CH. HD.	BR.	Ni.P.Mt.	2
10	SC. 6BA x 5/32" CH. HD.	BR.	Ni.P.Mt.	4
11	SC. 6BA x 5/16" CH. HD.	BR.	Ni.P.Mt.	2
12	SC. 6BA x 3/16" CH. HD.	BR	Ni.P.Mt.	4
17	SC. 6BA x 1/8" CH. HD.	BR.	Ni.P.Mt.	2
25	SC. 6BA x 11/32" CH. HD.	BR.	Ni.P.Mt.	3
	WASHER 6BA SMALL	BR	Ni.P.Mt.	3
32	SC. 6BA. x 1/2" CH. HD.	BR.	Ni.P.Mt.	1
34	SC. 6BA. x 7/16" C'SK. HD.	BR.	Ni.P.Mt.	4
35	SC. 6BA. x 3/8" CH. HD.	BR.	Ni.P.Mt.	2
36	SC. 6BA x 5/16" CH. HD.	BR.	Ni.P.Mt.	1
	SC. 6BA. x 1/4" CH. HD.	BR.	Ni.P.Mt.	1
	WD. SC. Nº 8 x 1 3/4" RD. HD. SECURELY FIXED TO TELEPHONE	MS OR BR	BLUED CLEAN	4

Ø REPLACEABLE ITEMS

POST OFFICE ENGINEERING DEPT.
E-IN-C'S OFFICE S BRANCH

DISTRIBUTION
P.O. GENERAL

REFERENCES
SEE SCHEDULE — SPEC. D1000 • S77

ASSEMBLY DRG. — WIRING DGM.

FILE — H.T.T.D.C TECH. GEN. 6 — SPEC S77

SCALE — 1/1 AND AS INDICATED — 3RD ANGLE PROJECTION

DECIMAL DIMENSIONS NOT TOLERANCED SUBJECT TO ±.

APP'D. IN S1 SECTION — DRN. / TCD. / CKD. } E.T. LTD CONT'RS. & P.O. — DATE 2·7·56

AMENDMENT	SUFFIX
ITEM 5:- DRG. No. INCORRECTLY SHOWN AS 90317. 23·1·56	A
ITEMS 16 & 29 UPDATED. ITEM 37 ADDED. 20.8.57	B
SUPERSESSION NOTE ADDED. J.C. 9.7.64	C

FOR SUPERSEDING ITEM FOR NEW WORK SEE DRG. 91797 (TELEPHONE No. 711CB)

TELEPHONE
Nº 327------(COLOUR)

(MARK 1)

DRG 90510