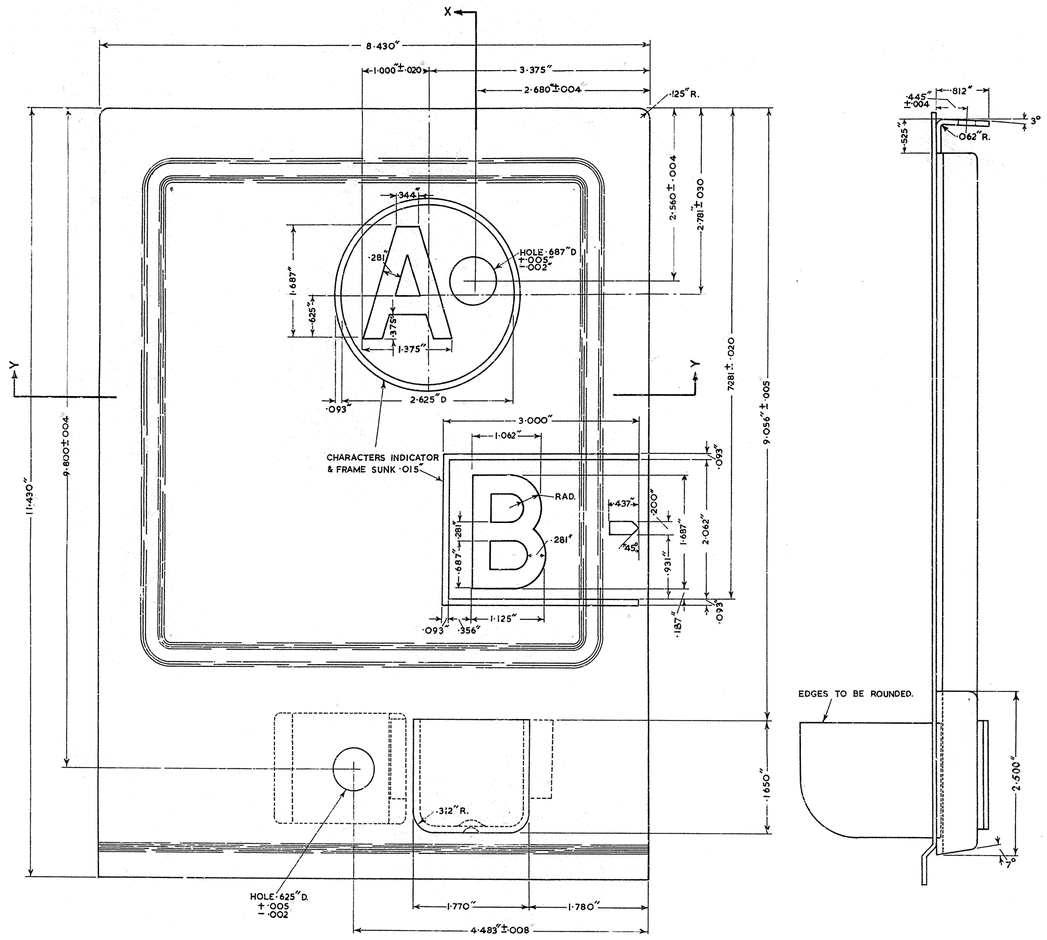

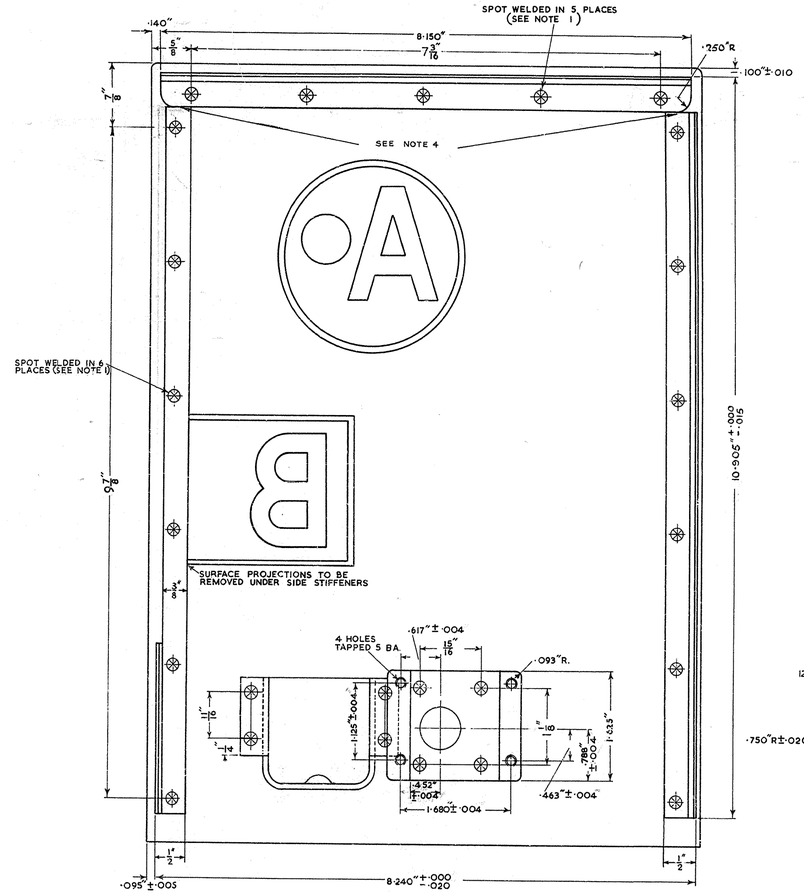

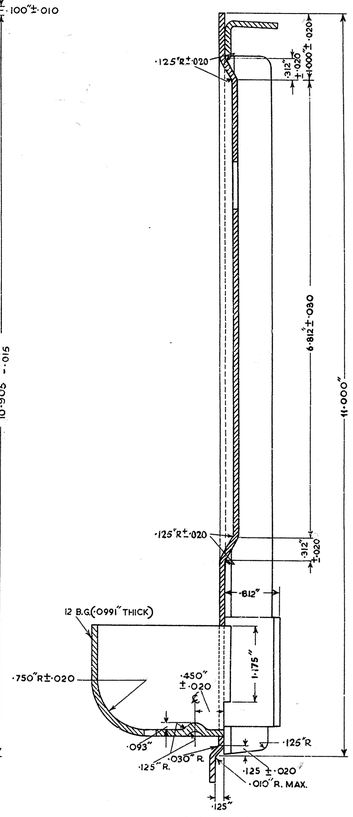

SECTION X-X

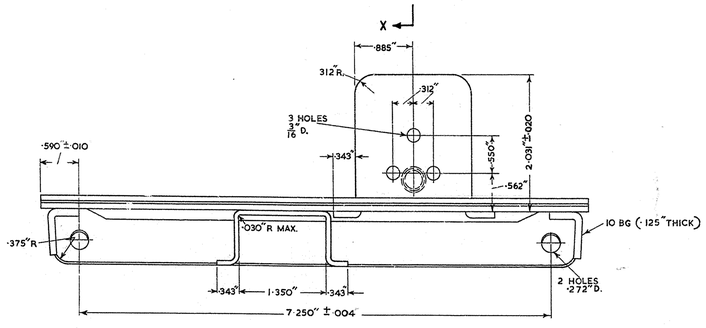

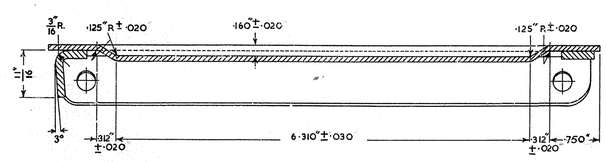

SECTION Y-Y

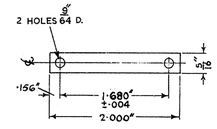

2. MATERIAL :- M.S. 10 B.G. (·125" THICK)
FINISH :- Zn.P. COL. LAC.

1 MATERIAL :- M.S. 14 B.G. (·0785" THICK)

FINISH :- PHOSPHATE ETCHED AND STOVE ENAMELLED BLACK 3 COATS ON FRONT, 2 ON BACK. CHARACTERS, INDICATOR & FRAME FILLED STOVE ENAMEL WHITE.

NOTES.
1. ⊗ INDICATES SPOT WELDING 3/16" D. FOR WELDING REQUIREMENTS SEE SPEC. S262.
2. ~~DEPTH OF PENETRATION OF WELDS MUST BE SUFFICIENT TO ENSURE SECURE JOINTS. EVIDENCE OF SPOT WELDING SHOULD NOT APPEAR ON FRONT FACE AFTER ENAMELLING.~~
3. ALL SHARP EDGES TO BE REMOVED.
4. A GAP OF NOT MORE THAN 1/32" MAY BE ALLOWED HERE.

POST OFFICE ENGINEERING DEPT.
E-IN-C'S OFFICE S BRANCH

DISTRIBUTION	
P.O. RESTRICTED	
REFERENCES	
	SPEC. NUMBER S262
ASSEMBLY DRG. 90384 SHEET 1-2	WIRING DIAM. —
FILE S6602	SPEC. S262
SCALE — 1 AND 2 1 INDICATED	THIRD ANGLE PROJECTION
DECIMAL DIMENSIONS NOT TOLERANCED SUBJECT TO ±·010" FRACTIONAL ± 1/16"	
APP'D IN S1/3 SECTION	DRN.
	CKD. TC
	CKD.
	DATE 10 5 54

AMENDMENT	SUFFIX
DET. 1. FINISH WAS PARKERIZED & STOVE EN. BLK. DET. 2. HOLES WERE 1/8" DIA. AT 1·687" PITCH. MES. 23.7.57	A
REFERENCE TO SPEC. S262 MADE IN NOTE 1. NOTE 2 DELETED. NOTE 4 ADDED. 19.11.57	B

BOX C.C. PART.
FRONT No. 5
DETAILS 1 & 2