TRIM TO THESE LINES 26" X 39"

DRG 90,078

S/D.O.

E-IN-C 318
GEN.GEN.D0032

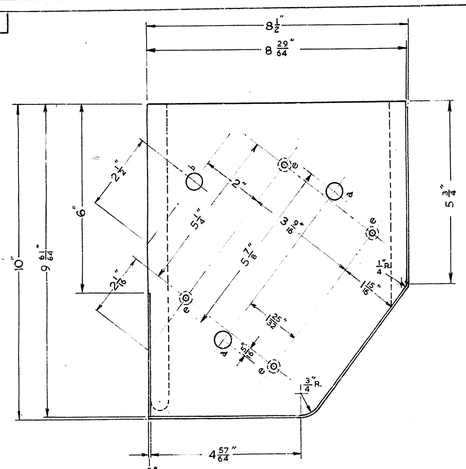


| SHEDULE | | | | | | | | | | |
|---|---|---|---|---|---|---|---|---|---|---|
| COMPONENTS | | | | | | SCREWS ETC. | | | | |
| ITEM | DESCRIPTION | DRG. | SPEC | No. OFF No. 3 | No. OFF No. 4 | DESCRIPTION | MT L. | FINISH | No. OFF No. 3 | No. OFF No. 4 |
| 1 | STRIP No. 5. | 90,075 | | 2 | — | WD. SC. No. 5 X 5/8" CSK. HD. | SS. | POLISHED | 4 | — |
| | | | | | | BRAD 1/16" X 3/4" | " | " | 6 | — |
| 2 | STRIP No. 6. | 90,075 | | — | 1 | WD. SC. No. 5 X 5/8" CSK. HD | " | " | — | 2 |
| | | | | | | " " " 2 X 1/2" " " | " | " | — | 2 |
| | | | | | | BRAD 1/16" X 3/4" | " | " | — | 3 |
| 3 | STRIP No. 7. | 90,075 | | — | 1 | WD. SC. No. 5 X 5/8" CSK. HD. | " | " | 2 | — |
| | | | | | | BRAD 1/16" X 3/4" | " | " | 4 | — |
| 4 | SHELF No. 3. | 90,076 | | 1 | — | ——— | | | | |
| 5 | SHELF No. 4. | 90,076 | | — | 1 | ——— | | | | |
| 6 | DETAIL No. 1. | 90,078 | | 1 | — | WD. SC. No. 6. X 5/8" RD. HD. | NS. | BLK. LAC. | 3 | — |
| 7 | " No. 2. | " | | — | 1 | " " " X " " " | " | " | — | 3 |
| 8 | " No. 3. | " | | 1 | — | " " " X " " " | " | " | 3 | — |
| 9 | " No. 4. | " | | — | 1 | " " " X " " " | " | " | — | 3 |

| DRILLING SHEDULE | |
|---|---|
| REF. LETTER | DRILLING |
| a | 1/4" D. |
| b | 1/4" D. EDGES WELL ROUNDED |
| c | ·218" D. & ELONGATED 1/16" |
| e | 9/32" D. & CBR. 3/8" D. X 3/16" DEEP ON UNDERSIDE |
| f | CI FOR No. 6 WD. SC. |

MATERIAL
FINISH } SEE SPEC

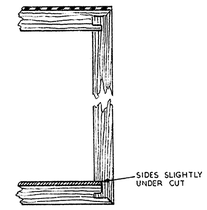


PART SECTION X—X

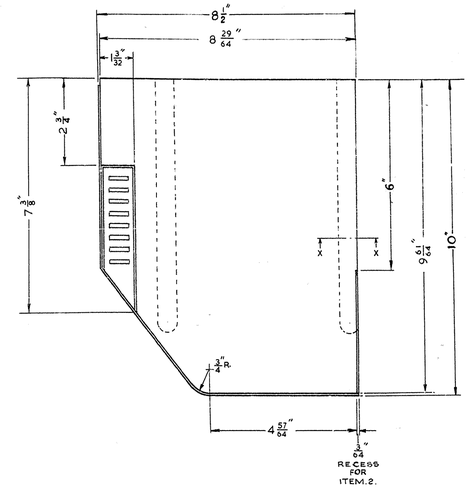


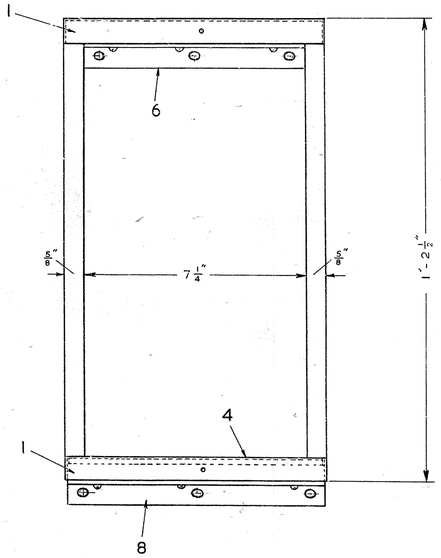


CONTAINER No. 3.

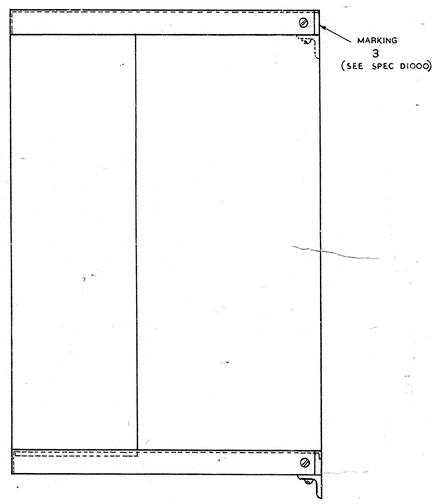


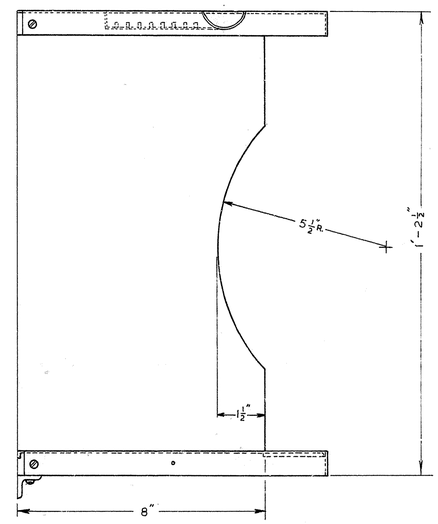


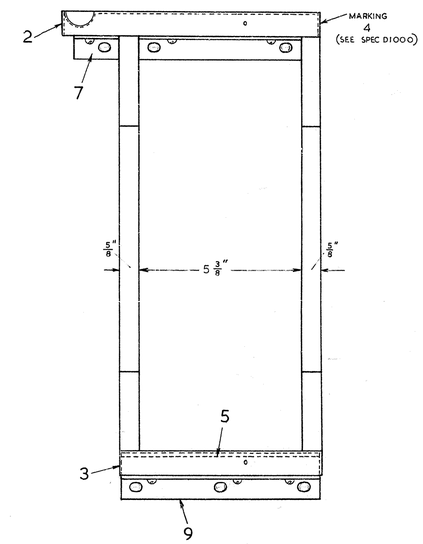


CONTAINER No. 4.

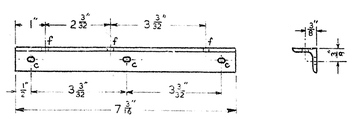


1. MATERIAL:- ANGLE M.S. 3/8" X 3/4" X 1/8"
FINISH:- GALVANIZED & TOUGH ENAMELLED BLACK 2 COATS

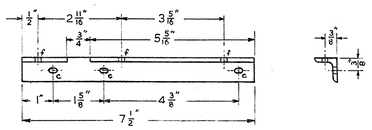


2. MATERIAL:-
FINISH:- } AS DETAIL 1.

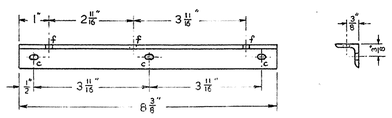


3. MATERIAL:-
FINISH:- } AS DETAIL 1.

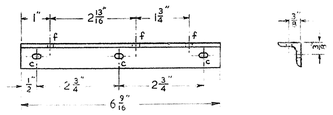


4. MATERIAL:-
FINISH:- } AS DETAIL 1.

POST OFFICE ENGINEERING DEPT.
E:IN-C'S OFFICE S BRANCH

DISTRIBUTION
P.O. RESTRICTED.

REFERENCES

| | | |
|---|---|---|
| SEE SCHED. | | SPEC D1000 |
| | | |
| | | |
| ASSEMBLY DRG. — | | WIRING DGM. — |
| FILE S811/8 | | SPEC. D 1475 |
| SCALE:- 1/2 AND AS INDICATED | | THIRD ANGLE PROJECTION |
| FRACTIONAL DIMS. NOT TOLERANCED SUBJECT TO 1/64" | | |
| APP'S IN S1/3 SECTION | DRN. | |
| | TCD. | |
| | CKD | |
| | DATE 3.2.51 | |

| AMENDMENT | SUFFIX |
|---|---|
| FORMALLY SHEWN ON DRG. 63747 SHEET 3-3 | |
| CONTAINER No. 3. DIM. 10" & 8½" ADDED. " 6" WAS 5¾. CONTAINER No. 4. DIM. 10" & 8½" ADDED " 6" WAS 5¾. | A |

DO NOT SCALE
(A MICROFILM PROCESS PRINT)

FOR SUPERSED

CONTAINERS
No's 3 & 4

90,0.