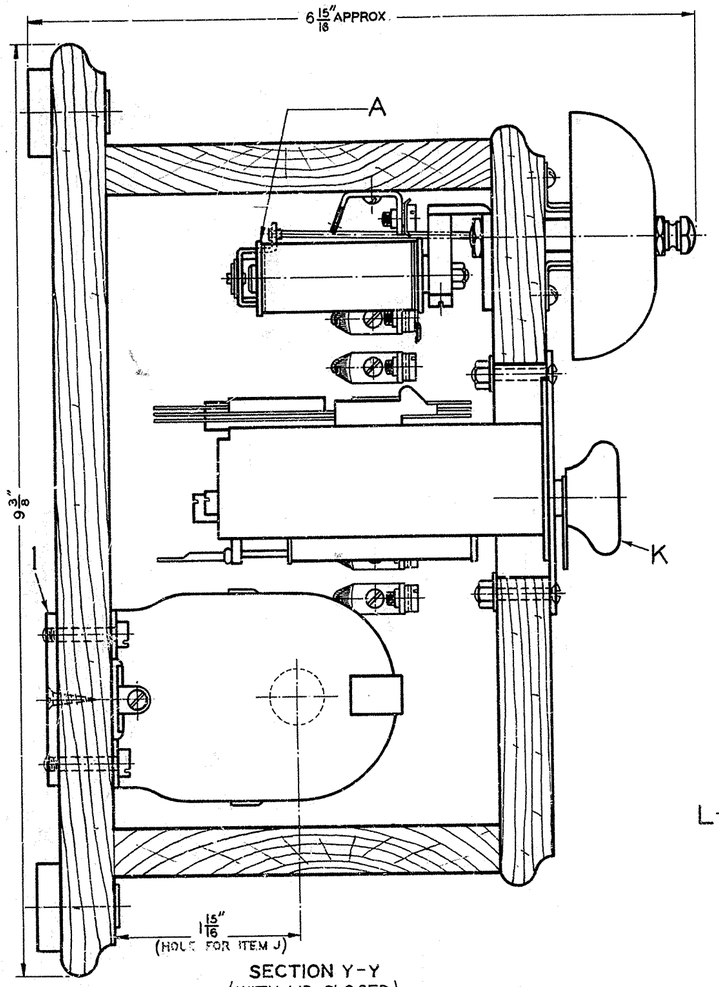

SECTION Y-Y
(WITH LID CLOSED)

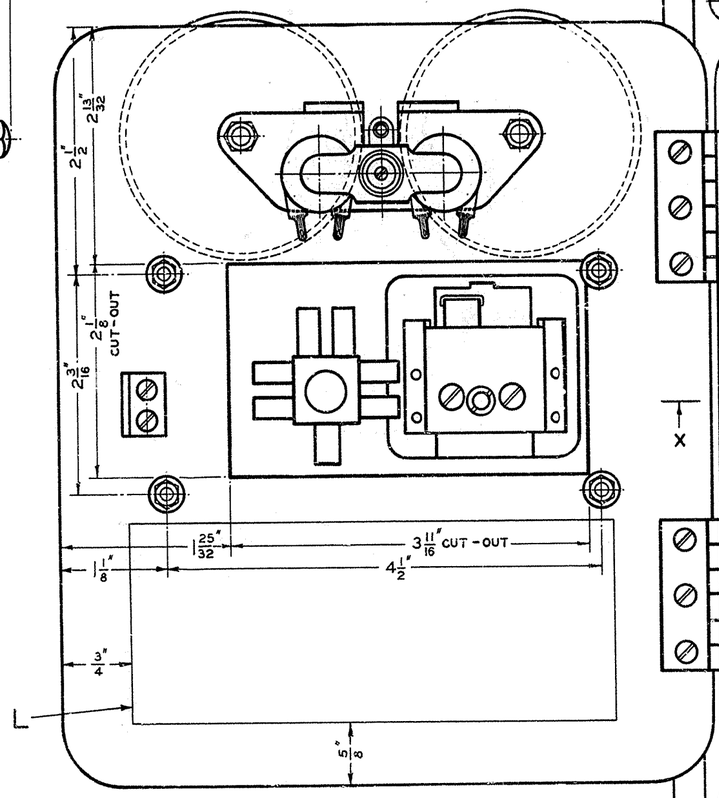

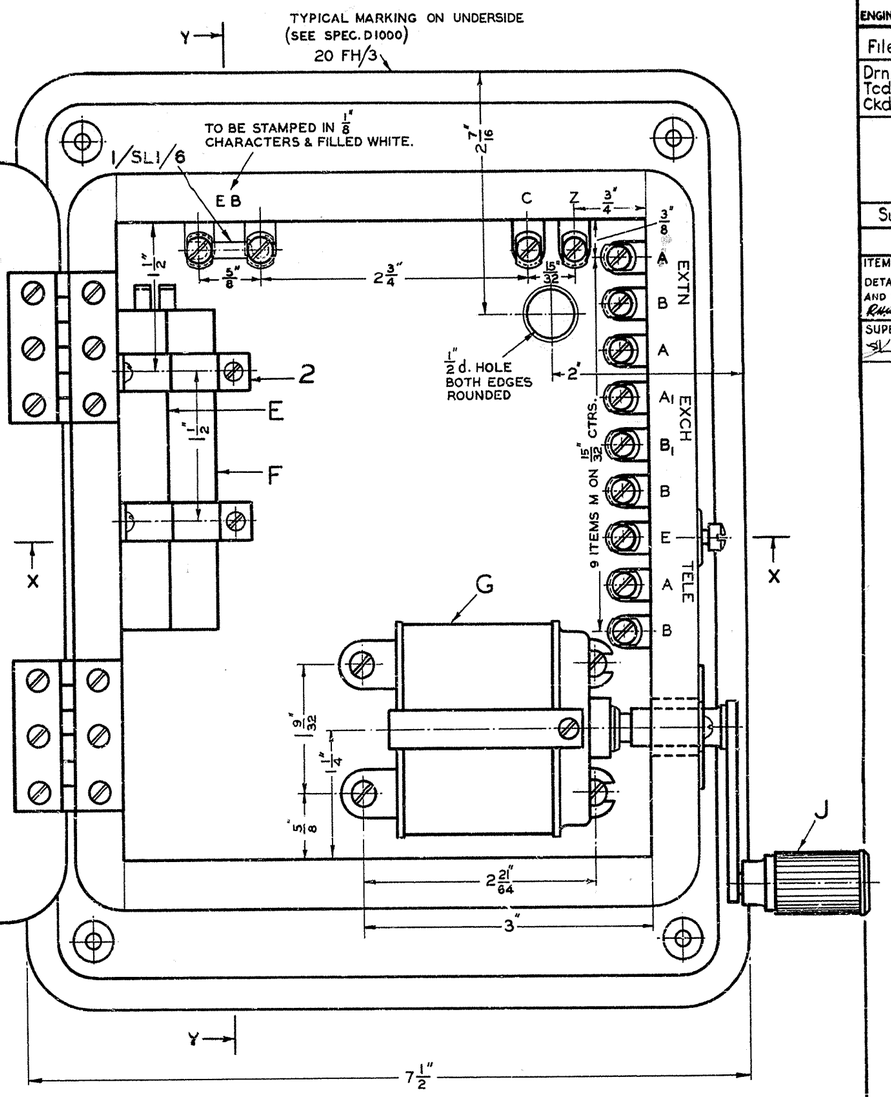

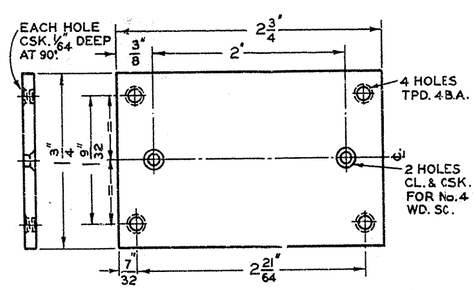

1. MATERIAL:- M.S., 10 S.W.G. (·128")
FINISH:- ZN. P, COL. LAC.

SCHEDULE							
ITEM	DESCRIPTION	QTY.	DRG.	SCREWS ETC. QTY.	DESCRIPTION	MTL	FINISH
A	BELL, No. 59 AA, UNMOUNTED.	1	63040	2 2	SC., 2 B.A. x 3/4" RD. HD. WASHERS 2 C.F.M.	M.S. —	NI.P. —
B	BELL-GONG, No. 2. OXIDIZED.	1	CD.254	—	——	—	—
C	BELL-GONG, No. 2A. OXIDIZED.	1	CD.254	—	——	—	—
D	CASE, No. 2, MODIFIED. (SEE NOTE 1)	1	7277	—	——	—	—
E	CONDENSER, M.C. No. 101.	1	9208	—	——	—	—
F	CONDENSER, M.C. No. 102.	1	9208	—	——	—	—
G	GENERATOR, No. 26A.	1	62257/1	4	SC, 4 B.A. x 3/4 CH. HD.	M.S.	ZN.P.
H	GUARD, BELL-HAMMER.	1	63869	2	WD. SC., No. 4 x 3/8 RD. HD.	BR.	NI.P.MT.
J	HANDLE, GENERATOR No. 7.	1	71008	—	——	—	—
K	INDICATOR AND KEY, No. 12.	1	62848	—	——	—	—
L	LABEL DIAGRAM, N.520.	1	DGM. N.520	—	——	—	—
M	PLATES, CONNEXION, No. 3.	13	62642	13	WD. SC., No. 3 x 3/8 RD. HD.	BR.	NI.P.MT.
1/SL1/6	——	1	SL1/6	—	——	—	—
1	——	1	8581/1	2	WD. SC., No. 4 x 1/2 CSK. HD.	M.S.	NI.P.MT.
2	——	2	8581/1	4	WD. SC., No. 3 x 3/8 RD. HD.	BR.	NI.P.MT.
				4	WD. SC. No. 8 x 2" RD. HD WRAPPED IN PAPER AND TIED TO ITEM "D"	M.S	BLUED

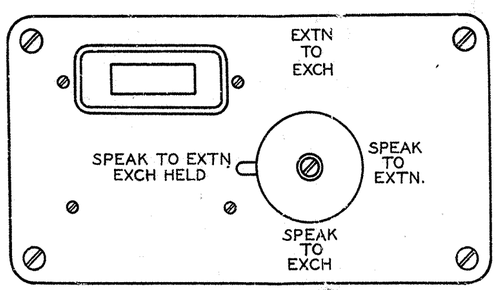

FRONT VIEW OF ITEM K SHOWING ENGRAVING

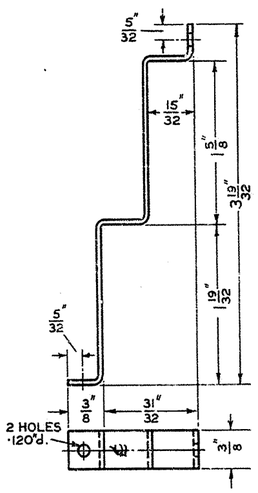

2. MATERIAL:- M.S., BT. C.R., 19 S.W.G. (·040")
FINISH:- ZN. P, COL. LAC.

NOTE 1. ITEM "D" MODIFICATIONS :-
APERTURE IN FRONT FOR ITEM 'K'
HOLE FOR CABLE & POSITION OF HOLE FOR ITEM "J" TO BE AS SHOWN
LID HINGED ON LEFT HAND SIDE

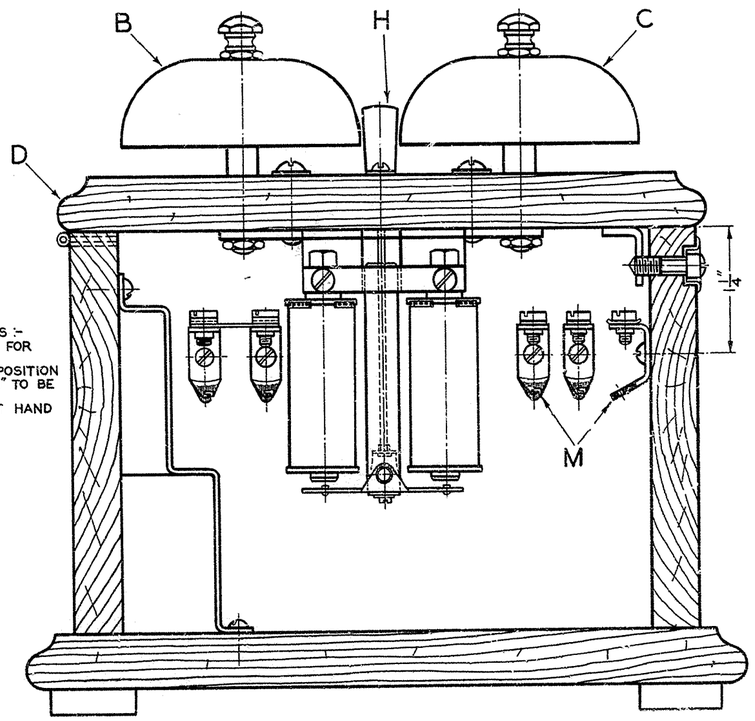

SECTION X-X.
(WITH ITEM K & CUT-OUT OMITTED)

POST OFFICE ENGINEERING DEPT.
ENGINEER-IN-CHIEF'S ..... S ..... BRANCH

File Ref. S1150/20 | Date 10·8·45

Drn. } H.B.
Tcd. }
Ckd. Appd. in S1 Section

Superseded for repair work by Drg. 8581/2

Amendment	Suffix
ITEM G :- DIM. 2 21/64" WAS DIM. 2 7/16". DETAIL 1.:- DIMS. 7/32" AND 2 21/64" WERE 5/32" AND 2 7/16" RESPECTIVELY. RWW. 9-4-48	A
SUPERSESSION NOTE ADDED. 7-4-52	B

CIRCULATION RESTRICTED

		S51
See Schedule	N 520	D1000
Drgs	Dgms	Specs.

BELL-SET
No. 20.
(MK. 3)

Scale :- 1/1 | Wiring Dgm. N 520
Spec:- S 51 | Assembly Drg.

DRG. 8581/1.

286.42048.P1957.1000.9p.946 M.&S.S.130.