TRIM TO THESE LINES.

13" x 8"

E-IN-C. 438.

POST OFFICE ENGINEERING DEPT. ENGR-IN-CHIEF'S OFFICE.			DRG. 62882
HOOK, RECEIVER Z.			SPEC'N. 161 SCALE:- ¼ DATE. 7-9-1937
DRAWN. J.H.D. TRACED. R.A.W. CHECKED. Eac	D.O.REF. A2/1629 FILE REF. S176/3.	APPR'D BY IN. S. BRANCH.	J Reid.

DRG'S.	DIAG'S.	SPEC'NS.	AMENDMENT.	SUFFIX.
		D.1000		

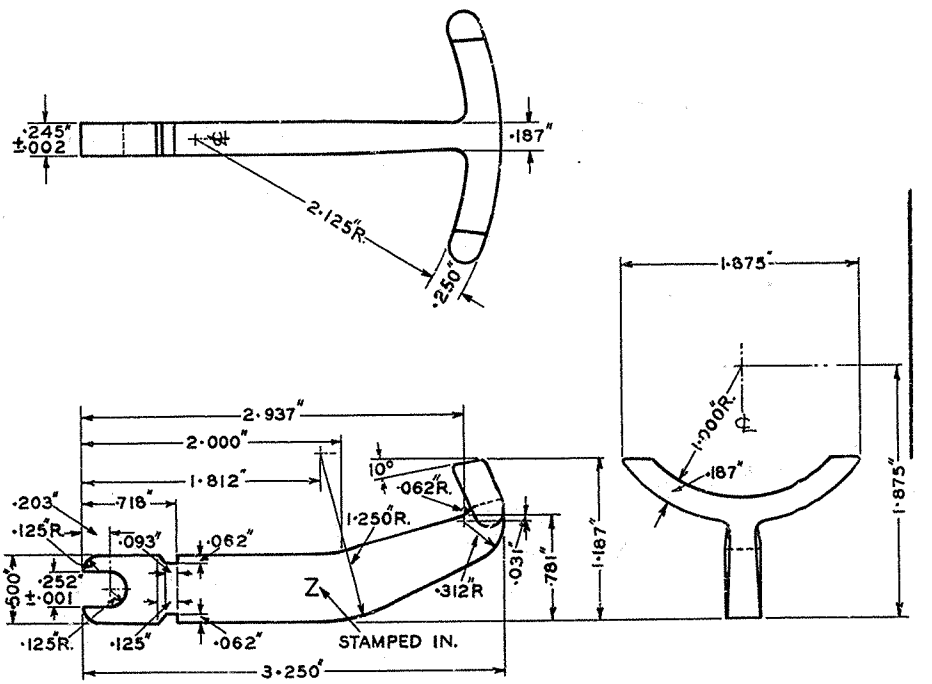

MATERIAL. BRASS. BEST QUALITY, FREE FROM SAND HOLES OR OTHER DEFECTS. SAND CAST OR HOT PRESSED.

FINISH. MACHINED. DULL BLACK ENAMELLED, STOVED.